REVISIONS				
ZONE	REV.	DESCRIPTION	DATE	APPROVED
	–	ORIGINAL RELEASE JOB# 407146–3	7/29/04	

DESCRIPTION

AMC MODEL AGH–8018–60DD–SF OPTION: 1218 IS A 12 TO 18 GHz FREQUENCY RANGE, HIGH SPEED OVER–OCTAVE BAND VARIABLE ATTENUATOR/MODULATOR, CONTROLLED BY 8 BIT BINARY LOGIC OR DRIVEN BY AN ANALOG POSITIVE VOLTAGE; UNIT IS PACKAGED IN A MINIATURE HERMETIC HOUSING FOR HIGH RELIABILITY APPLICATIONS.

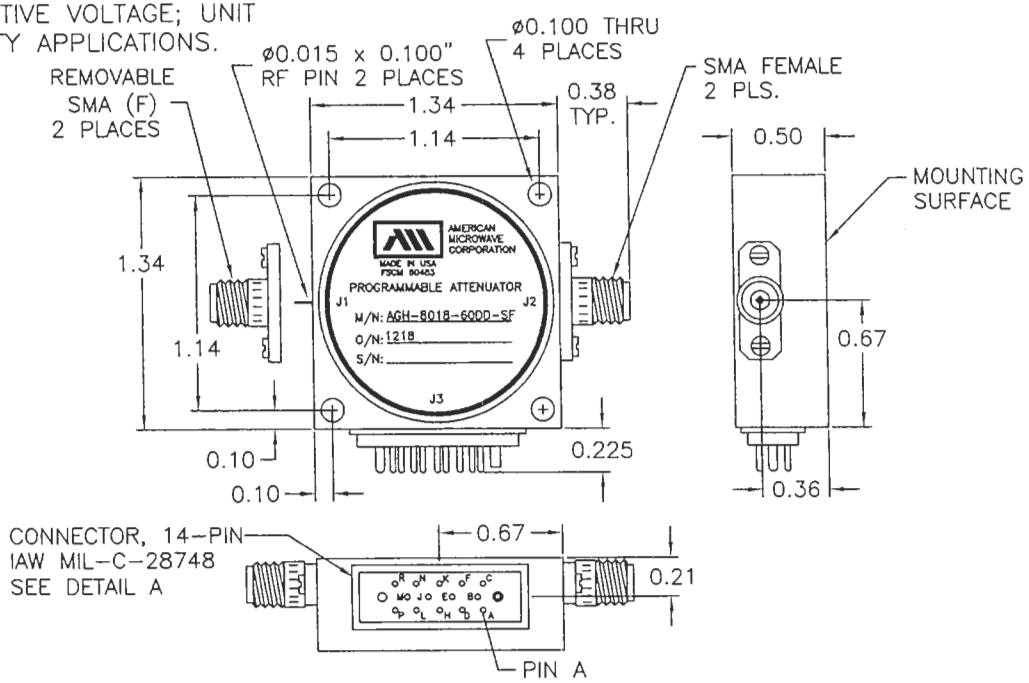

SPECIFICATIONS

- FREQUENCY RANGE: ..... 12 TO 18 GHz
- INSERTION LOSS: ..... 3.7 dB MAXIMUM
- ATTENUATION FLATNESS: ..... @ 10 dB = ± 0.7 dB
  @ 20 dB = ± 1.0 dB
  @ 40 dB = ± 1.5 dB
  @ 60 dB = ± 1.6 dB
- ATTENUATION ACCURACY: ..... 0–30 dB = ± 0.5 dB
  30–50 dB = ± 1.0 dB
  50–60 dB = ± 1.5 dB
- MONOTONICITY: ..... GUARANTEED
- TEMPERATURE COEFFICIENT: ..... ± 0.02 dB/°C
- SWITCHING TIME: ..... 500 nSec MAXIMUM
- VSWR: ..... 1.8:1 MAXIMUM
- POWER RATING: ..... +20 dBm CW OR PEAK
- CONTROL:
  DIGITAL: ..... 8 BIT TRU BINARY LOGIC, 0.25 dB MINIMUM ATTENUATION STEP
  ANALOG: ..... 0–6V ANALOG VOLTAGE, 10dB/VOLT TRANSFER FUNCTION
- POWER SUPPLY: ..... +12V TO +15V @ 100 mA MAXIMUM
  –12V TO –15V @ 15 mA MAXIMUM
- CONNECTORS:
- RF INPUT/OUTPUT: ..... FIELD REPLACEABLE SMA (FEMALE)
- POWER AND CONTROLS: ..... MINIATURE 14 PIN MALE (MIL–C–28748)
  MATING CONNECTOR (FEMALE) FURNISHED
- SIZE: ..... 1.34" x 1.34" x 0.50"

J3 PIN FUNCTION	
PIN	FUNCTION
A	GND
B	LOGIC CONTROL
C	–12 TO –15VDC
D	0.25dB (LSB)
E	0.5dB
F	1.0dB
H	4.0dB
J	2.0dB
K	16.0dB
L	32.0dB (MSB)
M	+12 TO +15VDC
N	8.0dB
P	GND
R	ANOLOG OUTPUT

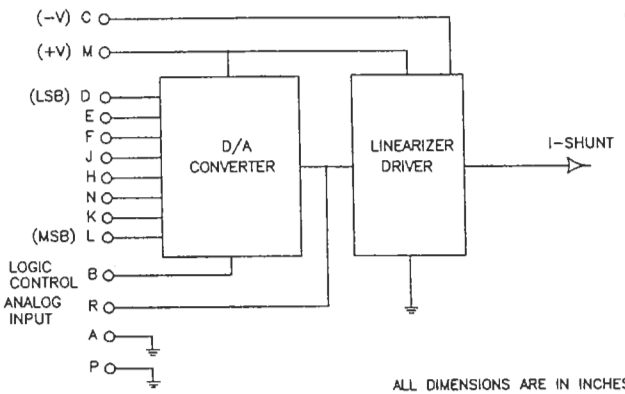

ENVIRONMENTAL RATINGS

- **TEMPERATURE** ..... –55°C TO +110°C (OPERATING)
  –65°C TO +125°C (STORAGE)
- **HUMIDITY** ..... MIL–STD–202F, METHOD 103B COND. B
- **SHOCK** ..... MIL–STD–202F, METHOD 213B COND. B
- **VIBRATION** ..... MIL–STD–202F, METHOD 204D COND. B
- **ALTITUDE** ..... MIL–STD–202F, METHOD 105C COND. B
- **TEMPERATURE CYCLE** ..... MIL–STD–202F, METHOD 107D COND. A

NOTE: SPECIFICATIONS WILL VARY OVER OPERATING TEMPERATURE
NOTE: THE ABOVE SPECIFICATIONS ARE SUBJECT TO CHANGE OR REVISION

ALL DIMENSIONS ARE IN INCHES
TOLERANCES:
X.XX ±0.010
X.XXX ±0.005

AMERICAN MICROWAVE CORPORATION
7311-G GROVE ROAD
FREDERICK, MARYLAND 21704 USA
TEL: 301-662-4700 FAX: 301-662-4938
WEBSITE: www.americanmicrowavecorp.com
E-MAIL: sales@americanmicrowavecorp.com
ISO 9001:2000 CERTIFIED

APPROVALS	DATE
DRAWN JDJ	7/29/04
CHECKED	8/2/04
ISSUED	

TITLE: PRODUCT FEATURE AGH–8018–60DD–SF OPTION: 1218
12–18 GHz, HIGH SPEED, VARIABLE ATTENUATOR

SIZE	FSCM NO.	DWG NO.	REV.
A	60483	100–7061	–

SCALE N:S SHEET 1 OF 3